COMBINATION FIXTURE - 3655 R&L

Item:_____

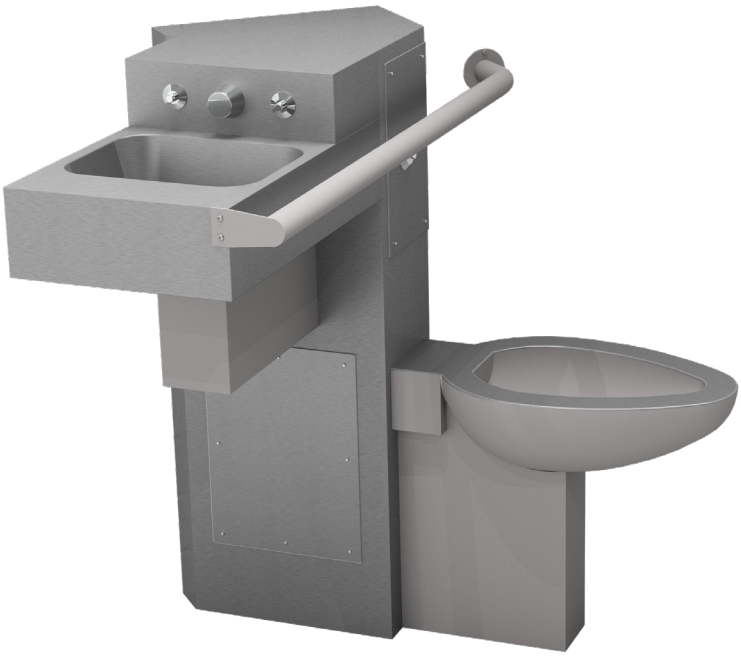

Unit may be pictured with some optional features.

1.6 gpf (6.0 Lpf) Fixtures - 3" waste connection

- ❑ **3655-R** Back supply connection 1" (25mm) MPT.
- ❑ **3655-L** Back supply connection 1" (25mm) MPT.

1.28 gpf (4.8 Lpf) Fixtures - 2-3/8" waste connection

- ❑ **HET3655-R** Back supply connection 1" (25mm) MPT.
- ❑ **HET3655-L** Back supply connection 1" (25mm) MPT.

- **Front mounted cabinet, wall outlet waste.**
- **Lavatory Basin-**
  - Rectangular.
  - Fast drain.
  - Air circulating self draining soap dish.
  - 4" (102mm) high backsplash.
  - 1 1/2" (38mm) P-trap sink waste with air vent.
- **Toilet Bowl-**
  - Elongated.
  - High polished integral seat.
  - Self draining flushing rim.
  - Blowout flushing action.
  - Fully enclosed trap.

WARNING: Cancer and Reproductive Harm - www.P65Warnings.ca.gov.

► DESCRIPTION

This Combination Lavatory/Toilet Fixture is designed for areas without an accessible pipe chase. Fixtures are fabricated using heavy gauge type 304 stainless steel, welded to form a vandal resistant unit. Internal piping is stainless steel. Exposed surfaces are polished to a satin finish, except for the integral seat which is polished to a bright finish. Valves and other optional features are available.

► PERFORMANCE STANDARDS

Metcraft's standard toilet is a 1.6 gpf (6.0 lpf) fixture with a 3'' (76mm) waste outlet. Metcraft offers a "High Efficiency Toilet" (HET) 1.28 gpf (4.8 lpf) with a 2 3/8" (60mm) waste outlet as an option. Metcraft bowls and assemblies are designed to withstand 5000 lb. (22kN) loading without permanent deflection and damage. This fixture meets or exceeds ASME A112.19.3 / CSA B45.4 standards for "Stainless Steel Plumbing Fixtures". The trap will pass a 2 1/8" (54mm) dia. ball. A minimum 1" (25mm) supply providing 35psi (241kPa) flushing pressure is required.

Listed by

► INSTALLATION

These fixtures are secured to the wall from the fixture (cell) side using a six point anchor system. Six bolts screw into expansion sheilds in the wall (Expansion sheilds are not included). The installer must provide wall openings for piping per rough-in drawings provided by Metcraft. Valves should be installed inside the fixture.

Plumbing connections and service are performed through access panels on the sides of the fixture and a sink enclosure beneath the sink. Access panels are secured in place with vandal resistant fasteners provided by Metcraft. Fixture meets A.D.A. requirements when installed per A.D.A. guidelines.

Water Consumption:
With a low consumption flush valve - 1.6 gpf (6 liters)
With a HET consumption flush valve - 1.28 gpf (4.8 liters)

RECOMMENDED FLUSH VALVES

	SLOAN	ZURN	DELANY
Low consumption	950-MBPM-1.6	ZH6150-MBPM-1.6	
HET	950-MBPM-1.28	ZH6150-MBPM-1.28	

OUTLET/MOUNTING

- ❑ **FW** On the floor, wall outlet (Standard).
- ❑ **FF** On the floor, floor outlet.

SPOUT

- ❑ **B1** Filler/Bubbler Spout.
- ❑ **B1H** Suicide Resistant Filler/Bubbler Spout.
- ❑ **B2** Filler/bubbler Spout with mouthguard.
- ❑ **B3H** Suicide Resistant Filler Spout.

HAND BASINS

- ❑ **RB** Rectangular Basin. (Standard)

LAVATORY WASTE

- ❑ **SJP** Slip Joint P-Trap. (Standard)
- ❑ **CWO** Combined Waste.

TOILET WASTE

- ❑ **GW** Gasket Waste Outlet.(Standard)
- ❑ **PE** Plain End Waste - 2" into fixture.

Product Options

- ❑ **AFH** Hydraulic Anti-Flood Valve.
- ❑ **MS** Mirror Finish Toilet Seat. (Standard)
- ❑ **MA** Ligature Resistant Skirt.
- ❑ **HT** Towel Hook.
- ❑ **PH** Recessed Tissue Holder.
  Not ADA Compliant on this Fixture.
- ❑ **TB** Toothbrush Holder.
- ❑ **OF** Overflow Vent.

OPTIONS/ACCESSORIES

- ❑ **A552** Wall Grab Bar.
- ❑ **A552LR** Wall Grab Bar w/ Closure Plate.
- ❑ **A557** Fixture Grab Bar.
- ❑ **A557LR** Fixture Grab Bar w/ Closure Plate.
- ❑ **FCS** Fixture Closure Shelf.
- ❑ **TSC** Toilet Seat Cover

PNEUMATIC VALVE ASSEMBLIES (0.5 GPM Flow Valves)

- ❑ **A311** Single Temperature, Single Fixture Valve.
- ❑ **A312** Dual Temperature, Single Fixture Valve.

WALL MOUNTED TOILET PAPER HOLDERS (ADA Compliant)

- ❑ **A720** Chase Mounted Recessed Toilet Paper Holder.
- ❑ **A721** Front Mounted Recessed Toilet Paper Holder.
- ❑ **A722** Ligature Resistant Front Mounted Recessed Toilet Paper Holder.

COMBINATION FIXTURE - 3655 R&L

Item:_____

3655-R As Shown
3655-L Opposite

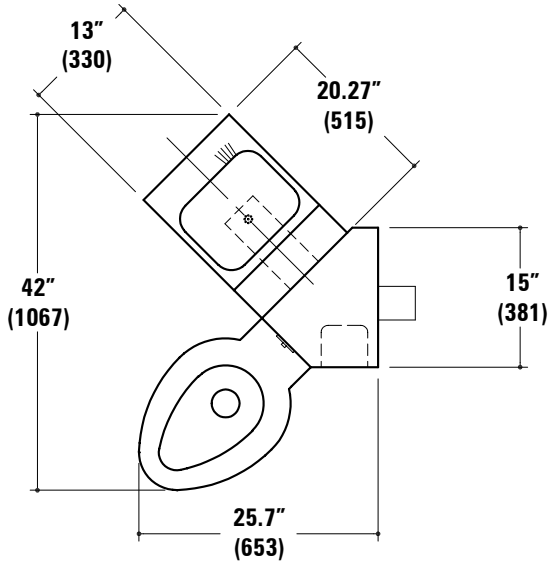

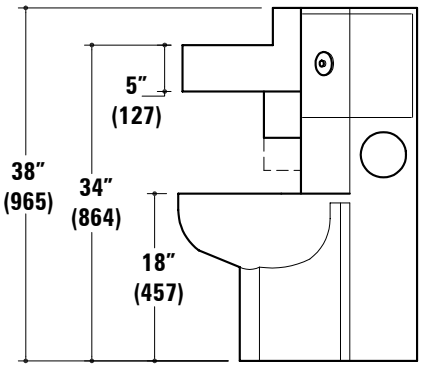

Due to continuous product improvement Metcraft reserves the right to make changes in design and specifications without prior notice. All dimensions should be verified with the factory for current information.

APPROVED FOR MANUFACTURING	Company:_____ Name:_____
	Signature:_____ Date:_____

A.D.A Combination Chase Style Reference

Item:_____

Right hand fixture is shown.

Shown with optional grab bars
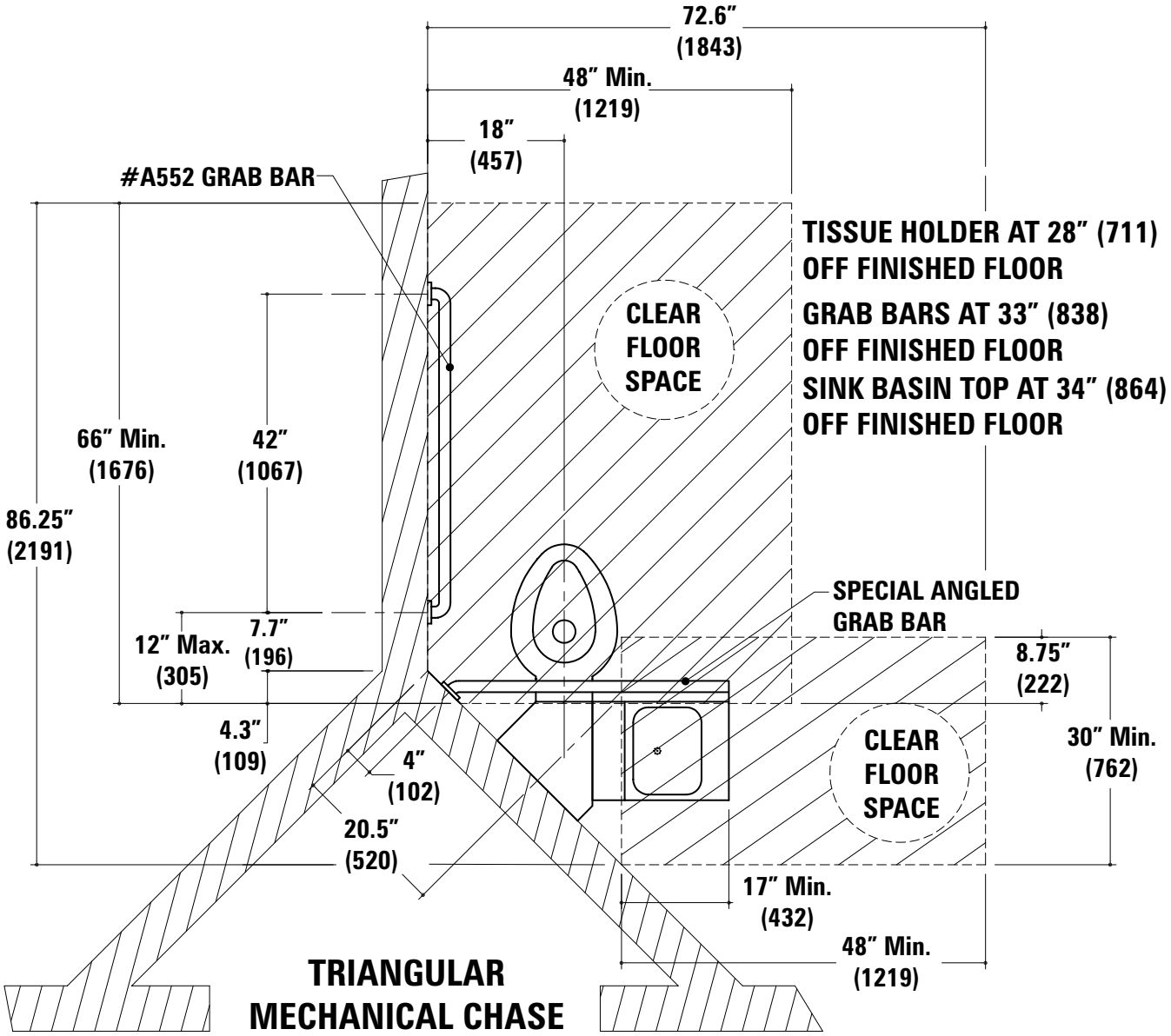
- ❑ **A557** (Rear)
- ❑ **A552** (Sidewall)