TOILET FIXTURE - R4670-4.25-13.125

Replaces AMERICAN STANDARD 2530.016 Neolo & 2531.016 Neolo

Item:_____

Unit may be pictured with some optional features.

1.6 gpf (6.0 Lpf) Fixtures - 3" waste connection

- ❑ **4670** Back supply connection 1 1/2" (38mm) FIPT.

1.28 gpf (4.8 Lpf) Fixtures - 2-3/8" waste connection

- ❑ **HET4670** Back supply connection 1 1/2" (38mm) FIPT.

STANDARD FEATURES

- **Front mounted fixture, wall outlet waste.**
- **Toilet Bowl-**
  - Elongated.
  - High polished integral seat.
  - Self draining flushing rim.
  - Siphon Jet type trap.
  - Fully enclosed trap.

WARNING: Cancer and Reproductive Harm - www.P65Warnings.ca.gov.

► DESCRIPTION

This Toilet Fixture is designed for areas without an accessible pipe chase. The fixture is fabricated using heavy gauge type 304 stainless steel, seamlessly welded to form a vandal resistant unit. Internal piping is stainless steel. Exposed surfaces are polished to a satin finish, except for the integral seat which is polished to a bright finish.

► PERFORMANCE STANDARDS

Metcraft's standard toilet is a 1.6 gpf (6.0 lpf) fixture with a 3'' (76mm) waste outlet. Metcraft offers a "High Efficiency Toilet" (HET) 1.28 gpf (4.8 lpf) with a 2 3/8" (60mm) waste outlet as an option. Metcraft bowls and assemblies are designed to withstand 5000 lb. (22kN) loading without permanent deflection and damage. This fixture meets or exceeds ASME A112.19.3 / CSA B45.4 standards for "Stainless Steel Plumbing Fixtures". The trap will pass a 2 1/8" (54mm) dia. ball. A minimum 1" (25mm) supply providing 35psi (241kPa) flushing pressure is required.

► INSTALLATION

The fixtures are supplied with four ¼" (6mm) threaded steel studs and tamper resistant cap nuts to secure fixture to the wall. Integrally welded 5-1/2" (140mm) diameter recessed gasket flange (gasket provided by others). The installer must provide wall openings for piping per rough-in drawings provided by Metcraft.

Water Consumption:
With a low consumption flush valve - 1.6 gpf (6 liters)
With a HET consumption flush valve - 1.28 gpf (4.8 liters)

RECOMMENDED FLUSH VALVES

	SLOAN	ZURN	DELANY
Concealed low consumption	611-1.6	Z6611-1.6	F540-1.6
Concealed HET	611-1.28	Z6611-1.28	-

Listed by

TOILET WASTE

- ❑ **GW** Gasket waste outlet (Standard).
- ❑ **PE** Plain end waste - 4" off fixture.

PRODUCT OPTIONS

- ❑ **MS** High Polished Seat (Standard).
- ❑ **HS** Hinged Seat
- ❑ **HO** Punched for hinged seat (By Others).
- ❑ **PCC** Powder Coat - Anti-microbial White.

OPTIONAL ACCESSORIES

- ❑ **A247** Flush valve thru wall connector.
  Wall Thickness:_____
- ❑ **A611** Flush Valve access Panel.
- ❑ **TSC** Toilet Shipping Cover

TOILET FIXTURE - R4670-4.25-13.125

Item:_____

NOTES:

1. Optional -FV Flush Valve
   - Wall Supply Connection. (Concealed)
2. Optional -FV Flush Valve
   - Top Supply Connection. (Exposed)

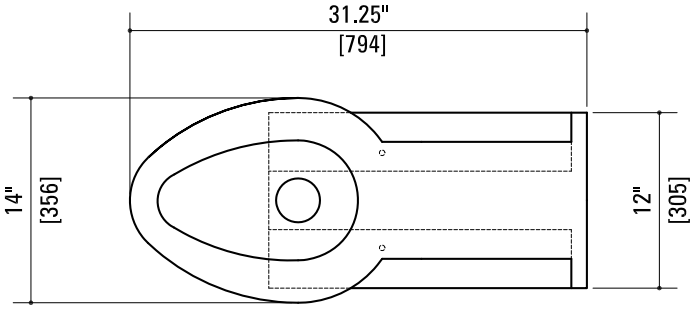

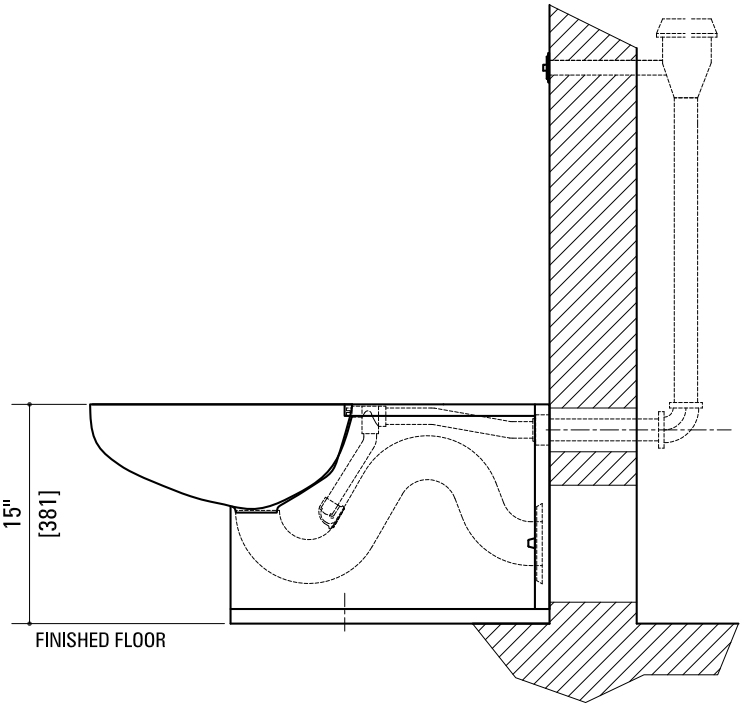

Due to continuous product improvement Metcraft reserves the right to make changes in design and specifications without prior notice. All dimensions should be verified with the factory for current information.

APPROVED FOR MANUFACTURING	Company:_____ Name:_____
	Signature:_____ Date:_____